BM8H

- Stainless steel IP68 shear beam load cell
- Hermetically sealed
- Suitable for hopper, platform and pallet scales
- High accuracy
- Current calibrated (sc–option)

test certificate no. TC8104 Revision 2
C of C no R60/2000–NL1–13.20 Revision 1

Certificate no. 10–056A1

Available models

Capacity	Accuracy	Full article description
500kg	C3	BM8H–C3–500kg–3B–A1
1t	C3	BM8H–C3–1t–3B–A1
1.5t	C3	BM8H–C3–1.5t–3B–A1
2t	C3	BM8H–C3–2t–3B–A1
3t	C3	BM8H–C3–3t–3B–A1
5t	C3	BM8H–C3–5t–3B–A1

Specification

Accuracy class		OIML R60 C3		
Output sensitivity (= FS)	mV/V	2.0 ± 0.002		
Maximum capacity (Emax)	t	0.5, 1,1.5, 2, 3, 5		
Maximum number of load cell intervals (nLC)		3000		
Ratio of minimum LC verification interval Y = Emax / vmin		10000		
Combined error	%FS	± 0.023		
Minimum dead load	of Emax	0%		
Safe overload	of Emax	150 %		
Ultimate overload	of Emax	300 %		
Zero balance	%FS	± 1.0		
Excitation, recommended voltage	V	5 ~ 12(DC)		
Excitation maximum	V	18(DC)		
Terminal resistance, input	Ω	350 ± 3/1000 ± 10		
Terminal resistance, output	Ω	350 ± 3/1000 ± 10		
Insulation impedance	MΩ	⩾ 5000 (at 50VDC)		
Temperature range, compensated	℃	–10 ~+40		
Temperature range, operating	℃	–35 ~ +65		
Storage temperature	℃	–40 ~ +70		
Element material		Stainless steel		
Recommended torque on fixation bolts	N.m	M12:100	M20:500	
Ingress Protection (according to EN 60529)		IP68		
ATEX classification (optional)		II1G Ex ia IIC T4	II1D Ex iaD 20 T73℃ C	II3G Ex nL IIC T4

Dimensions in mm

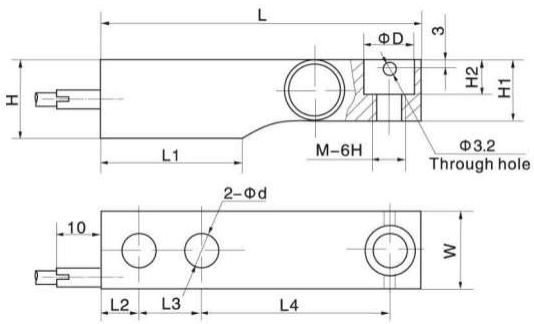

Dimension \ Capacity	500kg	1.0t	1.5t,2.0t	2.5t,3.0t	5.0t
L	130.0 (5.12)	130.0 (5.12)	130.0 (5.12)	172.0 (6.77)	172.0 (6.77)
L1	57.1 (2.25)	57.1 (2.25)	57.1 (2.25)	76.2 (3.0)	76.2 (3.0)
L2	15.5 (0.62)	15.5 (0.62)	15.5 (0.62)	19.1 (0.75)	19.1 (0.75)
L3	25.4 (1.0)	25.4 (1.0)	25.4 (1.0)	38.1 (1.5)	38.1 (1.5)
L4	76.2 (3.0)	76.2 (3.0)	76.2 (3.0)	95.3 (3.75)	95.3 (3.75)
H	31.8 (1.25)	31.8 (1.24)	35.9 (1.41)	44 (1.72)	44 (1.72)
H1	26.0 (1.02)	27.95 (1.10)	31.95 (1.26)	36 (1.42)	40 (1.57)
H2	14.2 (0.55)	14.2 (0.55)	14.2 (0.55)	20 (0.78)	20 (0.78)
W	31.8 (1.24)	31.8 (1.24)	31.8 (1.24)	38 (1.48)	38 (1.48)
D	20.5 (0.81)	20.5 (0.81)	20.5 (0.81)	30.2 (1.19)	30.2 (1.19)
d	13 (0.51)	13 (0.51)	13 (0.51)	20.5 (0.81)	20.5 (0.81)
M	M12	M12	M12	M20	M20

Wiring

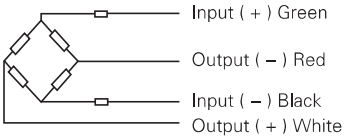

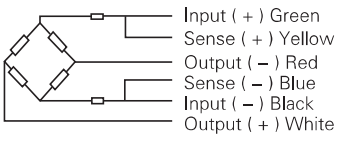

- Shielded, 6 conductor cable and 4 conductor cable for all capacities.
- Cable diameter: Φ5mm.
- Standard cable length for 500kg – 1t: 3m and for 2t – 5t: 6m.
- Shield not connected to element.