SMART WEIGHING SOLUTIONS

rinstrum

SMART WEIGHING SOLUTIONS

rinstrum

5200

(Totaliser/Checkweigher)

Digital Indicator Quick Start Manual

For use with Software Versions 1.0 and above

0025-606-120

Disclaimer

Rinstrum Pty Ltd reserves the right to make changes to the products contained in this manual in order to improve design, performance or reliability.

The information in this manual is believed to be accurate in all respects at the time of publication, but is subject to change without notice. Rinstrum Pty Ltd assumes no responsibility for any errors or omissions and disclaims responsibility for any consequences resulting from the use of the information provided herein.

SPECIAL NOTE
Trade Use of the Rinstrum 5200

This manual may occasionally make reference to Trade Use settings of the **5200.** Only properly marked Trade Certified versions of the **5200** can be used in **Legal for Trade** applications. Trade Certification is available only on **5200** instruments with software Versions 1.0 and above.

Some individual settings may not be legal for trade use. Please check regulations with the appropriate Weights and Measures Authority.

"Everything should be made as simple as possible, but not simpler."

- Albert Einstein -

N2708

14. Diagnostic Errors

Error	Description	Resolution
(E 0001)	The power supply voltage is too low.	Check supply
(E 0002)	The power supply voltage is too high.	Check scale / cables
(E 0004)	The load cell excitation voltage is too low.	Check scale / supply
(E 0008)	The load cell excitation voltage is too high.	Check scale / supply
(E 0010)	The temperature is outside of allowable limits.	Check location
(E 0020)	Scale build is incorrect. The number of graduations has been set less than 100 or greater than 100000.	Fix up scale build
(E 0040)	The positive sense line is not connected.	Check connection
(E 0080)	The negative sense line is not connected.	Check connection
(E 00C0)	Neither sense line is connected	Check connection
(E 0100)	The digital setup information has been lost.	Re-enter setup
(E 0200)	The calibration information has been lost.	Re-calibrate
(E 0300)	All setup information has been lost	Enter setup and calibrate
(E 0400)	The factory information has been lost.	Service
(E 0800)	The EEPROM memory storage chip has failed	Service
(E 2000)	The Clock calendar chip has failed.	Service
(E 4000)	The battery backed RAM has lost data.	Re-enter setup
(E 8000)	The EPROM memory storage chip has failed.	Service

The **E** type error messages are additive. For example if a condition is detected where the power supply voltage is low, resulting in a reduction of excitation voltage, the resulting Error messages will be **E 0005** (0001 + 0004). The numbers add in hexadecimal as follows:

1 - 2 - 3 - 4 - 5 - 6 - 7 - 8 - 9 - A - B - C - D - E - F
(For example, 2 + 4 = 6, or 4 + 8 = C)

12. Setup Errors

Error	Description	Resolution
(RES) (LO)	The scale build is configured for less than 100 graduations.	Check the resolution (count-by) and capacity settings.
(RES) (HIGH)	The scale build is configured for more than 100,000 graduations.	Check the resolution (count-by) and Capacity settings.

13. Calibration Errors

Error	Description	Resolution
(ZERO) (HI)	The load cell output is beyond allowable zero calibration range.	Check for incorrect scale connection. Reduce the dead load, or shunt the load cells.
(ZERO) (LO)	The load cell output is below allowable zero calibration range.	Check for incorrect scale connection. Increase the dead load, or shunt the load cells.
(SPAN) (LO)	The load cell signal range (span) is too small for these settings.	Incorrect span weight entered. Scale wiring incorrect. Wrong load cell capacity (too large). Wrong or no calibration weight added to scale.
(SPAN) (HI)	The load cell signal range (span) is too large for these settings.	Incorrect span weight entered. Scale wiring incorrect. Load cell capacity too small for application.
(NO) (ZERO)	There is no valid zero calibration so the span calibration cannot proceed.	Perform a Zero calibration.

Table Of Contents

1. Introduction

The **Rinstrum 5200** is a precision digital indicator using the latest Sigma-Delta A/D converter to ensure extremely fast and accurate weight readings. The **5200** can be used as a general purpose indicator but also specialises in Product Totalising and Checkweighing (Catchweighing).

1.1. Approvals

- C-tick approved
- CE, OIML and NSC approved

1.2. Features

- 20mm alpha-numeric LCD display
- Single Product Totalising is available as a standard feature
- Multiple Product Totalising and Checkweighing available with purchase of the "Smart" Software Option
- Product, Session and Grand Totalisation
- Checkweighing setpoints and grade limits kept for each product
- Real Time Clock and Calendar

1.3. Manuals

For more information on the **5200 Totaliser/Checkweigher**, refer to the **5200 Reference Manual**, **5200 Operator Manual**, **5200 Applications Manual** or the **5200 Communications Manual** (available from www.rinstrum.com).

11. Weighing Error Messages

Error	Description	Resolution
(U - - - - -)	The weight is below the minimum allowable weight reading.	Increase the weight or decrease the minimum allowable weight reading.
(O - - - - -)	The weight is above the maximum allowable weight reading. Warning - overloading may damage mechanical scale elements.	Check the condition of load cell connections. Check for damaged load cell.
(ZERO) (ERROR)	The weight reading is beyond the limit set for Zero operation. The operation of the **<ZERO>** key is limited in the setup during installation. Zero cannot be performed at this weight.	Use the TARE function instead or increase the Zero Range (Z.RANGE)
(STABLE) (ERROR)	Scale motion has prevented a **<ZERO>, <TARE>** or **<PRINT>** operation from occurring on command.	Try the operation again once the scale is stable.
(PRINT) (ERROR)	A printer problem has prevented the printout from being completed.	Look for loss of printer power, no paper or cable fault.
(QA) (DUE)	The calibration due date has been set and the current date exceeds this limit.	Press any key to clear the warning for 1 hour. To clear the warning permanently, recalibrate the instrument and set a new QA due date.

10.10. ASCII Codes

Code	Char	Code	Char	Code	Char	Code	Char	Code	Char
000	NULL	026	SUB	052	‘4’	078	‘N’	104	‘h’
001	SOH	027	ESC	053	‘5’	079	‘O’	105	‘i’
002	STX	028	FS	054	‘6’	080	‘P’	106	‘j’
003	ETX	029	GS	055	‘7’	081	‘Q’	107	‘k’
004	EOT	030	RS	056	‘8’	082	‘R’	108	‘l’
005	ENQ	031	US	057	‘9’	083	‘S’	109	‘m’
006	ACK	032	‘ ‘ (space)	058	‘:’	084	‘T’	110	‘n’
007	BEL	033	‘!’	059	‘;’	085	‘U’	111	‘o’
008	BS	034	“”	060	‘<’	086	‘V’	112	‘p’
009	HT	035	‘#’	061	‘=’	087	‘W’	113	‘q’
010	LF	036	‘$’	062	‘>’	088	‘X’	114	‘r’
011	VT	037	‘%’	063	‘?’	089	‘Y’	115	‘s’
012	FF	038	‘&’	064	‘@’	090	‘Z’	116	‘t’
013	CR	039	“’	065	‘A’	091	‘[‘	117	‘u’
014	SO	040	‘(‘	066	‘B’	092	‘\’	118	‘v’
015	SI	041	‘)’	067	‘C’	093	‘]’	119	‘w’
016	DLE	042	‘*’	068	‘D’	094	‘^’	120	‘x’
017	DC1	043	‘+’	069	‘E’	095	‘_’	121	‘y’
018	DC2	044	‘,’	070	‘F’	096	‘`’	122	‘z’
019	DC3	045	‘-‘	071	‘G’	097	‘a’	123	‘{‘
020	DC4	046	‘.’	072	‘H’	098	‘b’	124	‘|’
021	NAK	047	‘/’	073	‘I’	099	‘c’	125	‘}’
022	SYN	048	‘0’	074	‘J’	100	‘d’	126	‘~’
023	ETB	049	‘1’	075	‘K’	101	‘e’	127	DEL
024	CAN	050	‘2’	076	‘L’	102	‘f’		
025	EM	051	‘3’	077	‘M’	103	‘g’		

2. Specifications

Performance	
Display	Backlit LCD with 20mm, 6 digit primary display
Display Resolution	Up to 100,000 divisions, minimum of 0.15 µV/division
Count-by	1, 2, 5, 10, 20, 50, 100 (Entered in Displayed Weight)
Operating Modes	Single Range, Dual Interval and Dual Range
Zero Cancellation	+ / – 2.0mV/V
Span Adjustment	0.1mV/V to 3.0mV/V full scale
Stability/Drift	Zero: < 0.1uV/°C, Span < 10ppm/°C, Linearity: < 20ppm, Noise: < 0.05µV p-p
Operating Environment	Temperature –10 to +50°C, humidity < 90% non condensing
Digital	
Setup and Calibration	Full digital with visual prompting in plain messages
Memory Retention	Full non-volatile operation
Digital Filter	Averaging from 1 to 200 consecutive readings
Zero Range	Adjustable from 4% to 100% of full capacity
A/D Converter	
Type	24 bit Sigma Delta
Resolution	8,388,608 internal counts
A/D Sync Filter	Adjustable, 12.5 to 60 cycles / second, FIR filter > 80dB
Load Cells	
Excitation	8 volts for up to 8 x 350 ohm load cells
Load Cell Connection	6 wire + shield
Serial Comms	
Serial Outputs	Dual RS-232 plus RS-485
Capabilities	Automatic transmit, network or printer drive
Clock	Battery backed clock and calendar fitted
Power Supply	
DC	12/24VDC 10VA
AC	86 - 260VAC 48 - 62Hz 3-5VA
Dimensions	
Body Size	135mm wide x 65mm high x 105mm deep
Front Bezel	179mm wide x 82mm high (Overhang is 20mm on left and 23mm on right of Bezel)
Panel cutout	DIN 43 700 -137(+1)mm wide x 68(+1)mm high
Options	
Setpoint Option Card	4 x isolated 50volt, 500mA open collector transistor drives and 4 x isolated digital inputs (5V to 28V)
Combo Option Card	–10 to 10V or 4-20mA opto-isolated analog output, two outputs and one input as per the setpoint option card
No. of Option Slots	One standard
Features	
Standard Features	C-tick approved. CE, OIML and NSC Approved
	Five point linearity correction
	Adjustable anti-vibration filter
	Single Product Totalising
“Smart” Software Options	Multiple Product Totalising Checkweighing (Catchweighing)

3. Installation

The following steps are required to set up the **5200** indicator.

- Inspect instrument to ensure good condition.
- Ensure mounting options and connectors are available.
- Use connection diagrams to wire up load cell, power and auxiliary cables as required. Connectors for all cables are supplied with indicator.
- Follow instructions in the Instrument Setup - Full Digital section starting on page 14 to configure and calibrate instrument.
- Enter passcode to protect settings from tampering. Record passcode for future reference.

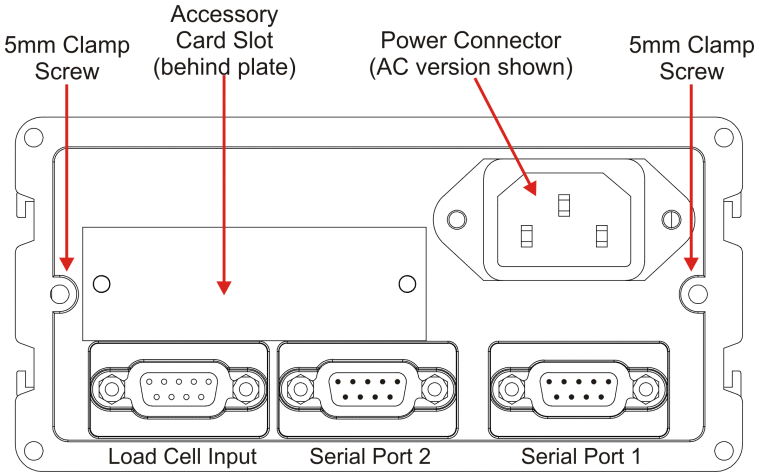

10.8. Other Tokens (Status)

ASCII	Viewer Button	Token Description
241	Status 0	Status 0 (**E**rror, **O**verload, **U**nderload, **M**otion, **N**et, **G**ross) uses last weight sent for gross/net
242	Status 1	Status 1 (**E**rror, **O**verload, **U**nderload, **N**et, **G**ross) according to last weight sent for gross/net
243	Status 2	Status 2 (**M**otion, ’ ‘)
244	Status 3	Status 3 (Centre of **Z**ero, ’ ‘)
245	Status 4	Status 4 (-, Range **1**, Range **2**) uses last weight sent for range
246	Status 5	Status 5 (**C**, **M**otion, ’ ‘)
247	Status 6	Status 6 (**_N__** Net, **_G__** Gross) uses last weight sent for gross/net
248	Status 7	Status 7 (**E**rror, **O**verload, **U**nderload, **M**otion, **N**et, **G**ross) according to automatic transmit reading for gross/net

10.9. Other Tokens (Misc)

ASCII	Viewer Button	Token Description
178	Space H	A number of ‘ ‘ as defined by the SPACE setting
179	Date	Date
180	Time	Time
238	ID	ID
239	Consec	Consecutive number
240	Ticket End	Ticket end
249	Auto start	Auto start character
250	Auto end	Auto end character

10.5. Grand Total Tokens

ASCII	Viewer Button	Token Description
214	Name	Grand Total: Name
215	Total Wgt	Grand Total: Total weight
216	Total Cnt	Grand Total: Total counts
217	Total Num	Grand Total: Number of adds
218	Last Wgt Add	Grand Total: Last add weight
219	No Grade Num	Grand Total: No grade number of adds
220	Grade 1 Num	Grand Total: Grade 1 number of adds
221	Grade 2 Num	Grand Total: Grade 2 number of adds
222	Grade 3 Num	Grand Total: Grade 3 number of adds
223	Grade 4 Num	Grand Total: Grade 4 number of adds
224	No Grade Wgt	Grand Total: No grade total weight
225	Grade 1 Wgt	Grand Total: Grade 1 total weight
226	Grade 2 Wgt	Grand Total: Grade 2 total weight
227	Grade 3 Wgt	Grand Total: Grade 3 total weight
228	Grade 4 Wgt	Grand Total: Grade 4 total weight
229	Preset Tare	Grand Total: Preset tare weight

10.6. Reading Tokens

ASCII	Viewer Button	Token Description
230	Display	Displayed weight (Gross/Net)
231	Gross	Gross weight
232	Net	Net weight
233	Counts	Number of counts
252	Disp Str	Displayed string
253	DispUnits	Displayed units
251	Units	Units of last sent weight
237	Auto	Auto weight (according to auto source setting)
234	Check Wgt	Last check weight
254	Check Grade	Last check grade name
235	Held Wgt	Held weight
236	Held Cnt	Held counts

10.7. User Strings Tokens

ASCII	Viewer Button	Token Description
172	User String 1	User defined string
173	User String 2	User defined string
174	User String 3	User defined string
175	Header	Header string
176	Footer	Footer string
177	New Page	String sent on new page

4. Warnings

4.1. General Warnings

- Indicator not to be subject to shock, excessive vibration or extremes of temperature (before or after installation).
- Inputs are protected against electrical interference, but excessive levels of electro-magnetic radiation and RFI may affect the accuracy and stability.
- The instrument should be installed away from any sources of excessive electrical noise.
- The load cell cable is particularly sensitive to electrical noise and should be located well away from any power or switching circuits.
- To ensure EMC or for RFI immunity, termination of the load cell shield at the **5200** end is important (ie. with a sound connection to the **5200** case via the DB9 backshell).

4.2. Electrical Safety

- For your protection all mains electrical hardware must be rated to the environmental conditions of use.
- The mains electrical outlet must be of protection earth contact.
- Pluggable equipment must be installed near an easily accessible power socket outlet. A permanently connected supply must have a readily accessible disconnect device.
- To avoid the possibility of electric shock or damage to the instrument, always switch off or isolate the instrument from the power supply before maintenance is carried out.

4.3. DC Power Supply

- DC supply need not be regulated provided it is free of excessive electrical noise and sudden transients.
- Instrument can be operated from high quality plug-pack provided there is sufficient capacity to drive both it and load cells.
- Use plug packs with a rating of 12VDC to 24VDC with output rating of 10VA.

4.4. Load Cell Signals and Scale Build

- Very low output scale bases can be used but may induce some instability in weight readings when used with higher resolutions (ie. higher output/lower number of divisions equals greater display stability/accuracy).

4.5. Configuration Issues

- Configuration and calibration can be performed from the front panel, using digital setup. When Setup is used, all menu items are accessible and care must be taken to ensure no accidental changes are made to calibration and trade settings.
- Enter a passcode to prevent unauthorised or accidental tampering.

5. Connections

5.1. Cable Shield Connection and Earthing

- Care should be taken when connecting shields to maximise EMC immunity and minimise earth loops and cross-talk (interference) between instruments.
- For EMC immunity, termination of the load cell shield at the **5200** end is important (ie. with connection to the **5200** case via the shield connection).
- The **5200** enclosure is directly connected to the shield connections on the cables.
- The **5200** should be connected to earth via a single reliable link to avoid earth loops.
- Where each instrument is separately earthed, interconnecting cable shields should be connected at one end only.
- Caution: Some load cells connect the cable shield directly to the load cell (and therefore the scale base). Connection of the shield in this situation may be site specific.
- The instrument complies with relevant EMC standards provided case ground connection is correctly made. Resistance measured between the **5200** case and the nearest earth point should be less than 2 ohms.
- If static problems are expected, options 0084/0085 may be required to protect the serial outputs.

5.2. Connecting Shields

To obtain full EMC resistance with the 5200, the load cell shield MUST be connected electrically to the metal shell of the DB9 connector. Refer to diagrams below or to instructions supplied with connector.

Backshell with Shield Clamp
(Preferred for Load Cells)

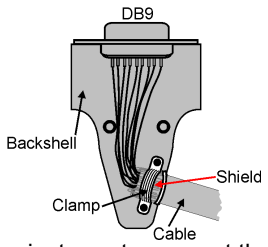

The easiest way to connect the cable shield to the DB9 backshell is to fold the shield wires back over the outside of the cable insulation so the cable clamp of the backshell makes good electrical contact with the shield when installed.

Backshell without Shield Clamp

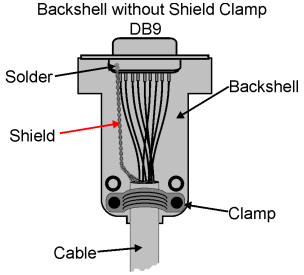

A method for connecting the cable shield to the DB9 is to twist the shield wires together and solder the ends to the DB9 casing.

ASCII	Viewer Button	Token Description	Comment
166	“123g”	Use lowercase status characters	
167	“123t”	Show units	
168	“123.”	Show ‘.’ even if it is at the end of the number	
169	no pg	Turn page and line tracking off	

10.3. Product Tokens

ASCII	Viewer Button	Token Description
181	Name	Product: Name
182	Total Wgt	Product: Total weight
183	Total Cnt	Product: Total counts
184	Total Num	Product: Number of adds
185	Last Wgt Add	Product: Last add weight
186	Last Cnt Add	Product: Last add counts
187	No Grade Num	Product: No grade number of adds
188	Grade 1 Num	Product: Grade 1 number of adds
189	Grade 2 Num	Product: Grade 2 number of adds
190	Grade 3 Num	Product: Grade 3 number of adds
191	Grade 4 Num	Product: Grade 4 number of adds
192	No Grade Wgt	Product: No grade total weight
193	Grade 1 Wgt	Product: Grade 1 total weight
194	Grade 2 Wgt	Product: Grade 2 total weight
195	Grade 3 Wgt	Product: Grade 3 total weight
196	Grade 4 Wgt	Product: Grade 4 total weight
197	Preset Tare	Product: Preset tare weight

10.4. Session Total Tokens

ASCII	Viewer Button	Token Description
198	Name	Session: Name
199	Total Wgt	Session: Total weight
200	Total Cnt	Session: Total counts
201	Total Num	Session: Number of adds
202	Last Wgt Add	Session: Last add weight
203	No Grade Num	Session: No grade number of adds
204	Grade 1 Num	Session: Grade 1 number of adds
205	Grade 2 Num	Session: Grade 2 number of adds
206	Grade 3 Num	Session: Grade 3 number of adds
207	Grade 4 Num	Session: Grade 4 number of adds
208	No Grade Wgt	Session: No grade total weight
209	Grade 1 Wgt	Session: Grade 1 total weight
210	Grade 2 Wgt	Session: Grade 2 total weight
211	Grade 3 Wgt	Session: Grade 3 total weight
212	Grade 4 Wgt	Session: Grade 4 total weight
213	Preset Tare	Session: Preset tare weight

10. Custom Print Format Tokens

10.1. Events Tokens

ASCII	Viewer Button	Token Description
129	Prod Tot.	Product Total Print
130	Sess Tot.	Session Total Print
131	Grand Tot.	Grand Total Print
132	Add (Print)	Add to Product (Print Key)
133	Check	New Check Weight
134	Hold	Weight Held
135	Stable	Weight has become Stable
136	Auto	Automatic Output
137	New Ticket	New Ticket
138	New Prod.	New Product in Ticket
139	End Prod.	End of Product in Ticket
140	Normal	Print Key (no add to product)
141	All Prod. 1	For Every Product
142	All Prod. 2	For Every Product
143	New Line	New Line (use SPACE setting)

10.2. Format Tokens

ASCII	Viewer Button	Token Description	Comment
146	Wgt 5	5 character weight string	
147	Wgt 6	6 character weight string	
148	Wgt 7	7 character weight string	
149	Wgt 8	8 character weight string	Default
150	Wgt 9	9 character weight string	
151	Wgt 10	10 character weight string	
152	no +/-	No Sign Characters	
153	‘ ’/’-‘	Sign character send as ‘ ‘ for positive and ‘-‘ for negative	Default
154	‘0’/’-‘	Sign character send as ‘0‘ for positive and ‘-‘ for negative	
155	‘+’/’-‘	Sign character send as ‘+‘ for positive and ‘-‘ for negative	
156	no ‘.’	No decimal point sent	
157	‘.’	Decimal point sent as ‘.’	Default
158	‘,’	Decimal point sent as ‘,’	
159	“123”	Weight sent without leading characters (eg. ‘123’)	
160	“ 123”	Weight sent with ‘ ‘ (space) for leading characters (eg. “ 123”)	Default
161	“00123”	Weight sent with ‘0’ (zero) for leading characters (eg. “00123”)	Default
162	“123E”	Show weight on error	
163	“---E”	Show dashes for weight on error	
164	“ E”	Show spaces for weight on error`	
165	“123G”	Use uppercase status characters	

5.3. Unused Pins

Unused pins are NOT to be connected.

Reason: The functions of the pins may not be compatible with equipment at the other end (eg. connecting output pins to a PC communications port may affect the operation of the PC).

5.4. Load Cell Connection

5.4.1. 6-Wire Connection

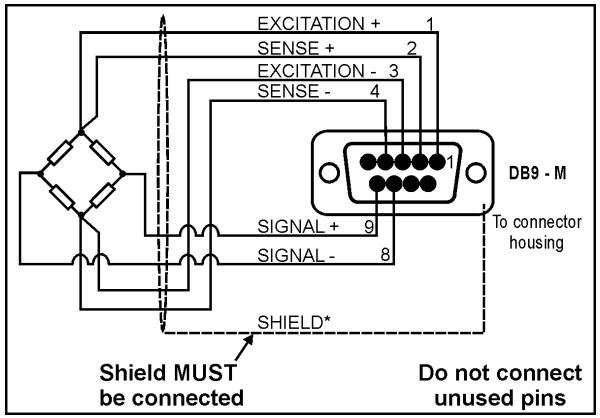

***For more information on shielding refer to page 8.**
For more information on unused pins refer to page 9.

5.4.2. 4-Wire Connection

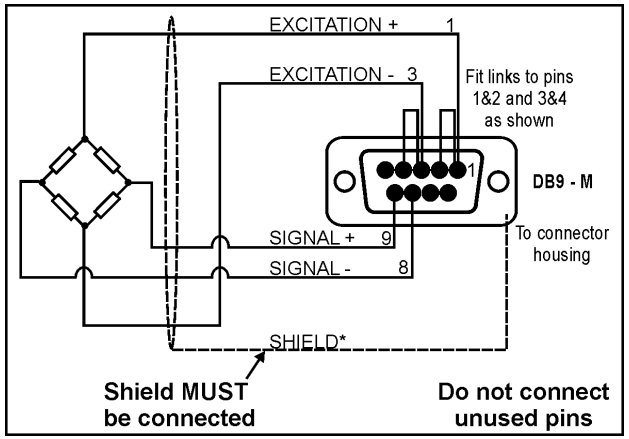

***For more information on shielding refer to page 8.**
For more information on unused pins refer to page 9.

5.4.3. Serial 1: RS-232 Networking Port - 5200 to PC Using COM1

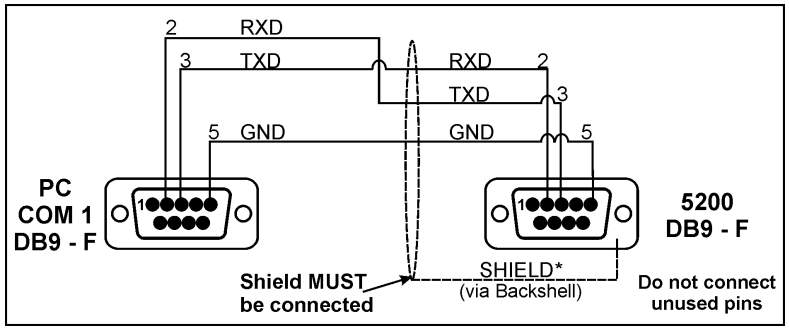

***For more information on shielding refer to page 8.**
For more information on unused pins refer to page 9.

DB9 Pin No	Function	Description	Connect to
2	RXD	RS-232 Receive Line	External Device Transmitter (Usually Pin 3)
3	TXD	RS-232 Transmit Line	External Device Receiver (Usually Pin 2)
5	GND	RS-232 Digital Ground	External Device Digital Ground (Usually Pin 5)
Backshell	Shield		Cable Shield

5.4.4. Serial 1: RS-232 Networking Port - 5200 to PC Using COM2

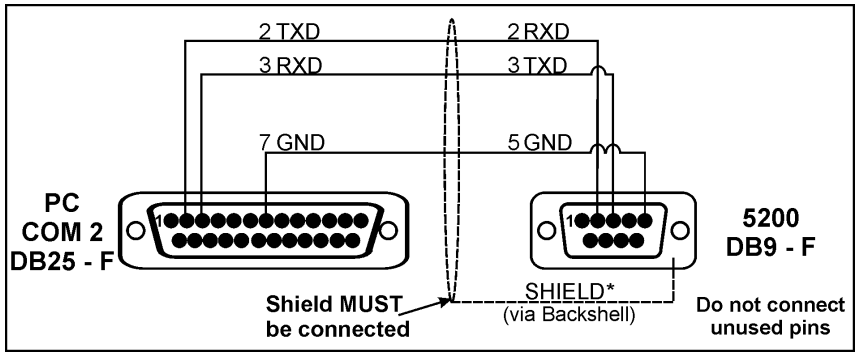

***For more information on shielding refer to page 8.**
For more information on unused pins refer to page 9.

- Voltage output can drive loads down to 2,000 ohms.
- Voltage output can be used with negative as well as positive weights (0V representing zero weight and 10V representing fullscale weight).
- Shielded cable should be used for connecting the analog outputs to external devices.
- Either voltage or current output must be selected. It is not possible to drive both simultaneously. Fine adjustment of the analog output is possible using the **CAL.LO** and **CAL.HI** options in the Analog menu.

The following table shows the connections for the Multi card.

Pin No.	Function	Description	Connect To
1	OUT 1	Output 1	Load 1
9	OUT 2	Output 2	Load 2
3	OUTCOM	Output Common	Output Supply Negative
6	INCOM	Input Common	Input Supply Negative
14	IN 1	Remote Function 1	Contacts 1
4	V (+)	Voltage Output Positive	Minimum load 2000 ohms
5	I (+)	Current Loop Output	Maximum load 500 ohms
12	V(-)	Voltage Output Negative	
13	I (-)	Current Loop Return	
SHELL	CH.GND	Chassis Ground	Cable Shield

9.7. Fine Adjustment of Analog Outputs

The analog outputs from either the combo card or analog output card are factory calibrated and can be used directly as shipped. In some applications, however, it is necessary to fine-tune the output to achieve maximum performance.

The low (0V or 4mA) outputs and high outputs (10V or 20mA) are calibrated from the keypad.

Calibrate the low output first followed by the high output. The FRC.AN1 item is used to force the output Lo and Hi as a final check.

The fine adjustment procedure is carried out as follows:

- Use an external instrument to measure the analog output.
- Access the keypad setup menu.
- Press **<GRP>** repeatedly to display the **ANALOG** group.
- Press **<ITM>** repeatedly to display the **CAL.LO** or **CAL.HI** item.
- Press **<SEL>** to cycle through the options.
- When the desired option is displayed press **<OK>** to accept the setting and re-display the item name.

9.4. Output Drivers

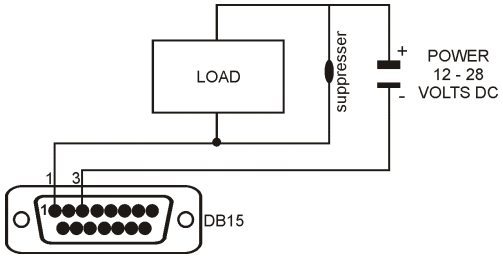

The output stage does not contain a power source and must be powered externally. The external supply should be from 12 to 28 volts DC and the maximum load current must be less than 0.5A

This circuit diagram shows a typical connection for one of the outputs. Each driver is protected against electrical noise, but it is strongly recommended that spark suppressors be fitted across any inductive loads such as relay and solenoid coils.

9.5. Remote Inputs

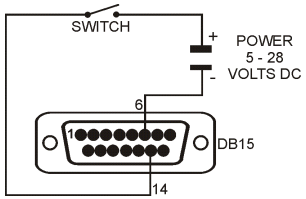

Each input is opto-isolated and requires a voltage input of between 5 and 28 volts DC to trigger. The following diagram shows a typical input circuit.

The following table shows the connections for the I/O card.

Pin No.	Function	Description	Connect To
1	OUT 1	Output 1	Load 1
9	OUT 2	Output 2	Load 2
2	OUT 3	Output 3	Load 3
10	OUT 4	Output 4	Load 4
3	OUTCOM	Output Common	Output Supply Negative
6	INCOM	Input Common	Input Supply Negative
14	IN 1	Remote Function 1	Contacts 1
7	IN 2	Remote Function 2	Contacts 2
15	IN 3	Remote Function 3	Contacts 3
8	IN 4	Remote Function 4	Contacts 4
SHELL	CH.GND	Chassis Ground	Cable Shield

9.6. Combo Card

- This card provides either a –10 to 10 Volt analog output or a 4 to 20mA analog output.
- It also provides two outputs and one input as per the setpoint card. The outputs are isolated from the input and the analog outputs.
- Current loop driver is active and supplies the source of power for the loop.
- Maximum circuit impedance must not exceed 500 ohms.
- Range of output is extended to include 0 to 24mA (allows for readings outside 0 to fullscale to be detected).

5.4.5. Serial 1: RS-485 Networking Port

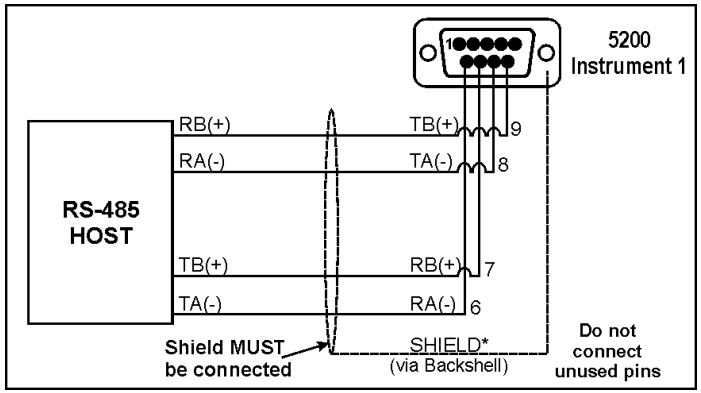

*For information on shielding refer to page 8.
For information on unused pins refer to page 9.

Pin No	Function	Description	Connect to
6	RA(-)	RS-485 Receive A (-)	External Network
7	RB(+)	RS-485 Receive B (+)	External Network
8	TA(-)	RS-485 Transmit A (-)	External Network
9	TB(+)	RS-485 Transmit B (+)	External Network
Backshell	Shield		Cable Shield

5.4.6. Multi-Drop Networking

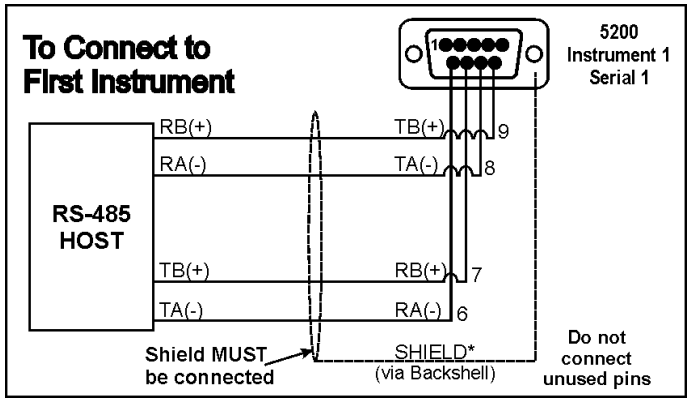

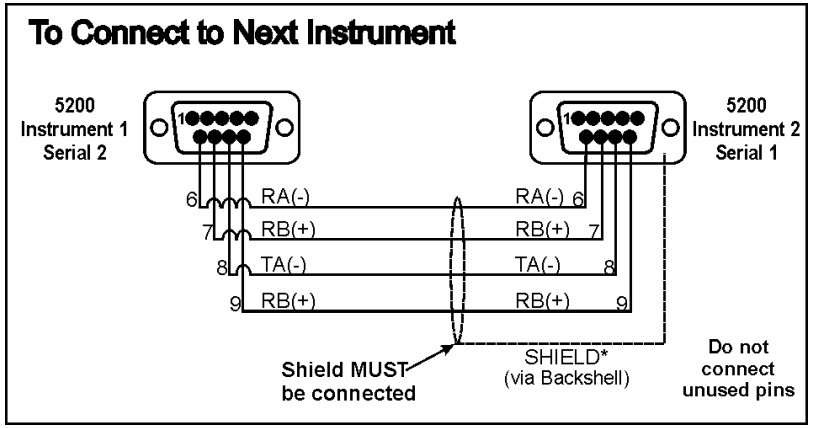

*For more information on shielding refer to page 8.
For more information on unused pins refer to page 9.

Cable 1			Cable 2			
Network Master	5200 Instrument 1 – Serial 1		5200 Instrument 1 – Serial 2		5200 Instrument 2 – Serial 1	
Function	Function	Pin	Function	Pin	Function	Pin
TA(-)	RA(-)	6	RA(-)	6	RA(-)	6
TB(+)	RB(+)	7	RB(+)	7	RB(+)	7
RA(-)	TA(-)	8	TA(-)	8	TA(-)	8
RB(+)	TB(+)	9	TB(+)	9	TB(+)	9

9. Accessories and Options

9.1. Introduction

The **5200** can be expanded by the installation of optional accessory cards. Two different cards are available for the **5200** - the setpoint card and the combo card.

9.2. Installing Option Cards

- Isolate the **5200** from the power before attempting to install an accessory card.
- Avoid excess handling of the accessory card as each card contains static sensitive devices.
- Hold the card by the edges or mounting plate as much as possible.
- Each option card is installed into a slot in the back panel of the **5200**. The slot is accessed by removing the cover plate at the top left.
- The connector lead is attached to the inside of this plate.
- Separate the lead from the plate, taking care not to lose the lead inside the instrument.
- Discard the plate, but retain the two mounting screws.
- Clean any remnants of tape from the lead connector.
- Plug the lead connector onto the four-pin socket on the accessory card. The connector only fits one way around.
- Slide the card into the slot in the back of the instrument (cable end first), until the mounting plate is fitted against the back plate.
- Re-install the two retaining screws.

IMPORTANT NOTE

The EMC and RFI immunity of the accessory card depends on a sound electrical connection between the support plate and the case of the instrument. Make sure that this connection is as sound as possible when refitting the two retaining screws.

9.3. Setpoint Card

The standard **5200** displays the results of the checkweigh or setpoint functions on the front panel annunciator LEDs only. These signals can be used to drive external devices by installing an output driver card. The card carries four independent opto-isolated open-collector transistor drivers. These can be used to operate external devices such as relays, signal lamps or PLC inputs. The card also has four opto-isolated remote inputs. The function of each input can be selected. Refer to Special Functions page 27 for details of the available functions.

8.5.2. Lock ®

This **Locking** function allocates the selected input as a locking input. When active all keys, including the remote keys are blocked. This may be used with a keylock switch to lock the instrument when not in use.

8.5.3. Check (Checkweigh)

- The **Check** function is used with checkweighing. Going from inactive to active starts a checkweigh sequence.

8.5.4. Total

The **Total** function is used with product totalising.
- A short press does a grand total print.
- A long press deletes the last weight added.

8.5.5. Hold and Peak Hold

The **Hold** function implements a manual **Hold**. The **Peak Hold** function implements a manual **Peak Hold** (ie. the largest absolute weight (either positive or negative) is stored in the peak value). The auxiliary display shows HLD (for hold) or PK (for peak hold) to indicate that the displayed weight is a held weight and not the current weight.
- Press the **<HOLD>** key once to hold the displayed weight. Press the key again to return the display to normal weighing.
- A long press toggles the display between the held weight and the held pieces.

The peak hold is initialised when the peak hold button is pressed.

There is a single hold event (EV.HOLD).

8.5.6. Count

The **Count** function is used to implement parts counting. Sample size and weight is stored for each product.
- Press the **<COUNT>** key to switch between weight display and counts display. The instrument annunciator will display **p** to indicate pieces.
- Press and hold this key to enter the sample quantity and then press the **<OK>** key. At this point it is possible to enter the sample weight directly using the numeric keys or use the weight of the current sample as the sample weight.

5.4.7. Serial 2: Printer Port

Pin No.	Function	Description	Connect To
1	PWR	12VDC out	Do not connect
2**	RXD	RS-232 Receive Line	External Device Transmitter (Usually Pin 3 on PC)
3	TXD	RS-232 Transmit Line	External Device Receiver (Usually Pin 3 on printer or Pin 2 on PC)
4**	DTR	DTR Handshake Line	External Device Busy Line (Usually Pin 20 on printer)
5	GND	Digital Ground	External Device Digital Ground (Usually Pin 7 on printer)
6*	RA(-)	RS-485 Receive A (-)	External Network
7*	RB(+)	RS-485 Receive B (+)	External Network
8*	TA(-)	RS-485 Transmit A (-)	External Network
9*	TB(+)	RS-485 Transmit B (+)	External Network
Backshell	Shield		Cable Shield

* See **Note 1**.

** See **Note 2**.

Note 1: Pins 6, 7, 8 and 9 on the Serial 2 connector are connected directly to pins 6, 7, 8 and 9, respectively on the Serial 1 connector.

Note 2: DTR (pin 4) and RXD (pin 2) are connected together internally. This means that it is possible to use the DTR line for printer paper detect or the RXD line for PC communications but not both simultaneously. **Do not connect both wires.**

5.4.8. Power

POWER 12 TO 24 Volts DC 10VA - +	**Warning** **For 5200 use only 12-24 VDC** Voltages outside this range may cause improper operation or damage.

6. Instrument Setup - Full Digital

Full Digital Setup provides access to configure and calibrate the instrument.

- Ensure the instrument is On. Press and hold both the **<ZERO>** and **<FIND>** keys together for two seconds.
- To exit and return to the Operator Interface, press the **<ZERO>** and **<FIND>** keys together for two seconds or select **- End -** from the menus.

6.1. Trade Critical Settings

⊗	Indicates setting is available only in Full Setup and is trade critical. The Trade counter will be incremented if setting is changed.
®	Indicates functions are only suitable for remote inputs.

6.2. Settings

The following tables identify the settings available in the **5200**.

8. Special Functions

The **5200** has up to four independent remote input functions that may be triggered by external keys connected to the optional accessory cards. In addition there is a single general purpose function key on the front panel of the **5200**. The function of each of these keys can be configured to any of the options detailed below. Not all remote functions are available on the front panel function key. Functions that are only suitable for remote inputs are marked with ® below.

8.1. Front Panel Keys (ZERO, TARE, GROSS/NET, PRINT) ®

The function of each of these front panel keys can be left to perform their **normal** operation or they can be **locked** which disables the key.

The **<PRINT>** key can also be set to **No Add to Total** that means the weight can print but will not be added to the totals.

8.2. Front Panel Function Key (FRONT) ®

The **<FRONT>** function key can be set to None, Check, Total, Hold, Peak Hold or Count. Functions are described below.

8.3. Remote Keys (Remote 1 (REM 1) to Remote 4 (REM 4))

Remote 1 to **Remote 4** can be set to None, Zero, Tare, Gross/Net, Print, Func, Blank, Lock, Check, Total, Hold, Peak Hold or Count. Functions are described below.

8.4. Special Functions

8.4.1. None

No function has been assigned.

8.5. Zero, Tare, Gross/Net, Print, Func

The remote inputs can be set to function as any of the front panel operation keys including any special function assigned to the blank **<FRONT>** panel function key.

8.5.1. Blank ®

The **Blanking** function allocates the selected input as a blanking input. When active this input causes the front display to be blanked to dashes (ie. **- - - - - -**) and blocks the operation of the front keys. This function is intended for use with tilt sensors on mobile weighing platforms to block operation of the weight indicator if the scale is not level.

7. Safe and Operator Setup

7.1. Safe Setup

Safe Setup restricts access to the Trade Critical settings. Items marked with ⊗ indicate that the setting is trade critical.

- To access **Safe Setup**, first ensure the instrument is on. Then press and hold both the **<GROSS/NET>** and **<FIND>** keys together for two seconds.

7.2. Operator Setup

The **Target Operator Menu** provides access to adjusting setpoint targets for the current product.

- To access the **Target Operator Menu**, first ensure the instrument is on. Then press and hold both the **<TARGET>** key for two seconds.

The **ID Operator Menu** provides access to set up to three user-defined strings.

- To access the **ID Operator Menu**, first ensure the instrument is on. Then press and hold both the **<ID>** key for two seconds.

- **Note:** The User String Names can only be altered in Full Setup with the **SER.P1:USR.NAM** and/or **SER.P2:USR.NAM** setting.

GRP	ITM	SEL	EDT	FRONT
			Underline = Defaults	
BUILD	TYPE⊗	Display Type	Single, Dual Range, Dual Interval	Save
	DP⊗	Decimal Point Position	000000, 00000.0, 0000.00, 000.000, 00.0000, 0.00000	Save
	CAP1⊗	Full Scale 1, Max Capacity, Lower Range	3000	Save
	E1⊗	Resolution (Count-By), Lower Range	1, 2, 5, 10, 20, 50, 100	Save
	CAP2⊗	Full Scale 2, Max Capacity, Upper Range	6000	Save
	E2⊗	Resolution (Count-By), Upper Range	1, 2, 5, 10, 20, 50, 100	Save
	AD.TARE⊗	Additive Tare Limit	0 Enter with numeric keypad.	Save
	UNITS⊗	Units of Measure	none, g, kg, lb, t	Save
	SYNC⊗	A/D Sync Filter	12.5, 15, 25, 30, 50, 60	Save
OPTION	USE⊗	Scale Usage: Industrial or Trade Use	TRADE (Trade), INDUST (Industrial) (+ and – weighing)	Save
	FILTER	Reading Average	1 to 10, 25, 50, 75, 100, 200 (number of readings)	Save
	JITTER	Anti-Jitter (Weight Stabilisation)	Off, Fine, Course	Save
	MOTION⊗	Motion Detection	Off, 0.5-1.0(fine), 1.0-1.0, 2.0-1.0, 5.0-1.0 0.5-0.5 1.0-0.5, 2.0-0.5, 5.0-0.5 0.5-0.2 1.0-0.2, 2.0-0.2, 5.0-0.2 (coarse) Default: 1.0-1.0 (ie. 1.0 Division in 1.0 Second)	Save
	INIT.Z	Initial Zero at Power Up	OFF, ON	Save
	Z.TRAC⊗	Zero Tracking Sensitivity	Off, 0.5-1.0(fine), 1.0-1.0, 2.0-1.0, 5.0-1.0 0.5-0.5 1.0-0.5, 2.0-0.5, 5.0-0.5 0.5-0.2 1.0-0.2, 2.0-0.2, 5.0-0.2 (coarse)	Save
	Z.RANGE⊗	Zero Operating Range	02-02, 01-03, 20-20, 100.100 Default: 02-02 (ie. -2% to +2%)	Save
	Z.BAND⊗	Zero 'Dead' Band	0 (ie. -0.5 to 0.5 graduations)	Save
	I.LOCK	Totaliser Interlock	20 Enter with numeric keypad.	

GRP	ITM	SEL	EDT Underline = Defaults	FRONT
CAL	**ZERO⊗**	**Zero Calibration Routine** (Current weight displays)	Remove all weight. **<OK>** starts routine (**Z.in P** displays). **<ITM>** key to exit, **<OK>** to repeat routine.	
	SPAN⊗	**Span Calibration Routine** (Current weight displays)	Add test weight. **<OK>** to show calibration weight value. Set correct weight with numeric keypad. **<OK>** starts routine (**S.in P** displays). **<ITM>** key to exit, **<OK>** to repeat routine.	
	ED.LIN⊗	**Edit Linearisation Points** **L1. - - -** Select Linearisation point 1 to 5 (**L2**, **L3**, **L4**, **L5**). (Approx. % of fullscale)	**<OK>** key to view the list of linearisation points. **<SEL>** key to step through the list of points. **<OK>** to change the selected linearisation point. Add the calibration test mass to the scale. **<OK>** to enter a corrected weight value for this point. Enter the new weight from the keypad. **<OK>** starts routine (**L.in P** displays). **<ITM>** key to exit, **<OK>** to repeat routine.	
	CLR.LIN⊗	**Clear Linearisation Points** **L1. - - -** Select Linearisation point 1 to 5 (**L2**, **L3**, **L4**, **L5**) (Approx. % of fullscale)	**<OK>** key to view the list of linearisation points **<SEL>** key to step through the list of points **<OK>** to clear the selected linearisation point **<OK>** to clear point or **<ITM>** key to exit.	
	DIR.ZER⊗	**Direct mV/V Zero Calibration**	Remove all weight. **<OK>** starts routine (displays current weight). **<OK>** (displays current weight as mV/V). Set correct mV/V signal strength with numeric keypad. **<OK>** to accept setting. **<ITM>** key to exit, **<OK>** to repeat routine.	

TEST	**SCALE**	**Scale Base Test Display**	Displays load cell output in mV/V (calibrated to 0.1% worst case) Trade Mode=5 sec display	
	HI.RES	**High Resolution x 10 Mode for Scale Testing**	**OFF**, **ON**	**Save**
	FRC.OUT	**Force Outputs of Setpoint Card**	**OFF**: All outputs off. **ON1**: Output 1 on. **ON2**: Output 2 on. **ON3**: Output 3 on. **ON4**: Output 4 on. Setpoint Card - 4 outputs available Combo Card - outputs 1 and 2 available	
	TST.INP	**Test Inputs of Setpoint Card**	**- - - -** (Default display) Activating each input advances through each input (eg. **- -** 3 **-** indicates input 3 is active). Setpoint Card - 4 inputs available Combo Card - 1 input available	
	O.LOAD	**Overload Counter** Records the number of times the scale has been overloaded (ie. 135% of fullscale).		
FACTRY	**DEFLT⊗**	**Restore Factory Defaults** **Cont N** (No) **Cont Y** (Yes)	**Cont N** **Warning**: Choosing **Cont Y** will clear all stored data except calibration.	**Save**
	DEL.PRD	**Deletes All Products from Indicator** **Cont N** (No) **Cont Y** (Yes)	**Cont N** **Warning**: Choosing **Cont Y** will clear all IDs from the indicator (regardless of whether there are weights stored for the IDs).	**Save**
	CONFIG	**Software License**	Use numeric keypad to enter Software Option Code.	**Save**
- END -	**EXIT SETUP**	**Return to Operator Interface**		**Save**

GRP (ZERO)	ITM (TARE)	SEL (GROSS/NET)	EDT (PRINT) Underline = Defaults	FRONT (OK)
CLOCK	**TIME**	**Set Time** 24 hour clock Currently set time displays	Set time in the format **HH.MM** Use numeric keypad to enter numbers.	**Save**
	DATE	**Set Date** DD.MM, then the currently set date displays. After setting the date, YEAR, then the currently set year displays.	Set day and month in the format **DD.MM** Then set the year in the format **YYYY**	**Save** **Save**
	QA.OPT⊗	**Enable Quality Assurance Option**	**OFF, ON** (Flashes QA Due from the day after QA due date)	**Save**
	QA.DATE⊗	**Quality Assurance Due Date** DD.MM, then the currently set date displays. After setting the date, YEAR, then the currently set year displays.	Set day and month in the format **DD.MM** Then set the year in the format **YYYY**	**Save** **Save**
	DTE.FMT	**Date Format**	**DD.MM.Y2, DD.MM.Y4, MM.DD.Y2, MM.DD.Y4, Y2.MM.DD, Y4.MM.DD**	**Save**
	TME.FMT	**Time Format**	**24 HOUR, 12 HOUR**	**Save**
	DTE.SEP	**Date Separator Character**	/ Slash (eg. 30/08/2003) - Dash (eg. 30-08-2003) . Dot (eg. 30.08.2003)	**Save**
	TME.SEP	**Time Separator Character**	: Colon (eg. 17:37) . Dot (eg. 17.37)	**Save**

CAL ctd.	**DIR.SPN⊗**	**Direct mV/V Span Calibration**	Add test weight. **<OK>** starts routine (displays current weight). **<OK>** (displays current weight as mV/V). Set correct mV/V signal strength equal to calculated span mV/V for scale with numeric keypad. **<OK>** to accept setting. **<ITM>** key to exit, **<OK>** to repeat routine.	
	FAC.CAL⊗	**Restore Factory Calibration** **Cont N** (No) or **Cont Y** (Yes)	**Cont N** **Warning**: Choosing **Cont Y** will restore default factory calibration.	**Save**
SPEC	**PASS.CD**	**FULL.PC** **Full Setup Passcode**	(**000000** no passcode). Set 1 to 6 digit passcode with numeric keypad.	**Save**
		SAFE.PC **Safe Setup Passcode**	(**000000** no passcode). Set 1 to 6 digit passcode with numeric keypad.	**Save**
		OPER.PC **Operator Passcode**	(**000000** no passcode). Set 1 to 6 digit passcode with numeric keypad.	**Save**
	KEY.LOC	**Front Panel Key Locking** **Z T G P F** **Z** Zero Enabled **-** Zero Locked **T** Tare Enabled **-** Tare Locked **G** Gross/Net Enabled **-** Gross/Net Locked **P** Print Enabled **N** Not Added to Total **-** Print Locked **F** Front Enabled **-** Front Locked	**ZTGPF** **<SEL>** changes position, **<EDT>** changes character. **Z** Zero key is enabled. **-** Zero key is locked (disabled). **T** Tare key is enabled. **-** Tare key is locked (disabled). **G** Gross/Net key is enabled. **-** Gross/Net key is locked (disabled). **P** Print key is enabled. **N** Weight prints but is not added to product total. **-** Print key is locked (disabled). **F** Front (user defined) function key is enabled. **-** Front (user defined) function key is locked (disabled).	**Save**
	FUNCTN	**Front Function Key and Remote Key Settings** **FRONT and REM 1 to 4 ®**	**FRONT Function Key: None, Check, Total, Hold, Pk.Hold, Count** **REM 1 to REM 4 Keys: None, Zero, Tare, Gr.Net, Print, Func, Blank, Lock, Check, Total, Hold, Pk.Hold, Count**	**Save**
	B.LIGHT	**Backlight Operation**	**ON, OFF**	**Save**
	AUX.DSP	**Auxiliary Display**	**OFF, TIME**	**Save**

GRP (ZERO)	ITM (TARE)	SEL (GROSS/NET)	EDT (PRINT) Underline = Defaults	FRONT (OK)
SER.P1 and SER.P2	**SER.P1:TYPE**	**Serial Port 1 Output Type**	**OFF:** Disables the port. **ON.LO**: Enable automatic transmission at 10Hz or printing **ON.HI**: Enable automatic transmission at the frequency entered in the SYNC item or printing **NET**: Sets the instrument to function a network device.	**Save**
	SER.P2:TYPE	**Serial Port 2 Output Type**	**OFF:** Disables the output (can be used as a network port). **ON:** Enables automatic transmission at 10Hz or printing.	**Save**
	FORMAT **Port 1 Type**=ON.LO or ON.HI **Port 2 Type**=ON	**Output Format**	**AUTO.A, B, C, D, E, PRINT.A, B, C** and **CUSTOM**	**Save**
	NET.OPT (Port 1 Only)	**ADDRESS Serial Address**	**00 to 31** Enter with numeric keypad.	**Save**
	NAME (Port 1 Only)	**Instrument ID**	Enter with alphanumeric keypad.	**Save**
	AUT.OPT **Port 1 Type**=ON.LO or ON.HI **Port 2 Type**=ON **Format**=AUTO.A to E or CUSTOM	**SRC** **Auto Output Source**	**DISP**: Displayed reading (gross or net). **GROSS**: Gross weight **NET**: Net weight **FULL**: All data displayed transmitted	**Save**
		ST.CHR **Start Character**	Default: **2** (Start of Text (STX)). Can be set to any valid ASCII character. If set to Null (0), no character will be sent in this position.	**Save**

ANALOG	**SRC**	**Analog Output Source**	**DISP**: Displayed weight reading, either gross or net. **GROSS**: Gross weight only. **NET**: Net weight only.	**Save**
	TYPE	**Analog Output Type**	**OFF:** Analog output disabled **VOLT:** Voltage Output (-10v to 10v, 0v at 0 weight) **CUR:** 4-20 mA current output **ABS.CUR:** Absolute weight reading, output as 4-20mA current output	**Save**
	CAL.LO	**Calibrate Zero Output** **UP**: Up (Increase output level) **UP.FST**: Up Fast (Increase output level at higher rate) **DN**: Down (Decrease output level) **DN.FST**: Down Fast (Decrease output level at higher rate)	**UP** or **DN**: The **<EDT>** key is used to adjust the output in **small** increments. **UP.FST** or **DN.FST:** The **<EDT>** key is used to adjust the output in **large** increments.	**Save**
	CAL.HI	**Calibrate Fullscale Output** **UP**: Up (Increase output level) **UP.FST**: Up Fast (Increase output level at higher rate) **DN**: Down (Decrease output level) **DN.FST**: Down Fast (Decrease output level at higher rate)	**UP** or **DN**: The **<EDT>** key is used to adjust the output in **small** increments. **UP.FST** or **DN.FST:** The **<EDT>** key is used to adjust the output in **large** increments.	**Save**
	FRC.AN1	**Force Analog Output**	**LO, HIGH**	

GRP (ZERO)	ITM (TARE)	SEL (GROSS/NET)	EDT (PRINT) Underline = Defaults	FRONT (OK)
SET.PTS ctd.	**HYS**	**HYS 1 to HYS 4** **Setpoint Hysteresis**	**0** Enter with numeric keypad.	**Save**
	CHK.OPT **SET.TYP**=CHECK	**TRG.OPT Trigger Option**	**INPUT:** Trigger on checkweigh input. **WEIGHT:** Trigger on checkweigh input & weight level.	**Save**
		TRG.LEV Trigger Level	**100** Enter with numeric keypad.	**Save**
		TRG.RST Trigger Reset Level	**0** Enter with numeric keypad.	**Save**
		PRE.DLY Pre-Sample Delay	**1.00** Enter with numeric keypad.	**Save**
		WGHT.AV Averaging Time	**1.00** Enter with numeric keypad.	**Save**
		DSP.OPT Display Option	**NORMAL:** Display stays in normal weighing mode. **WEIGHT:** Display shows last check weight. **GRADE:** Display shows last grade (product category).	**Save**
		DISP.TO Display Timeout	**3.00** Enter with numeric keypad.	**Save**
		GRADE 1 to GRADE 4 **and NO GRADE** **Grade Names**	Enter with alphanumeric keypad. **G0** Default No Grade Name **G1** Default Grade 1 Name **G2** Default Grade 2 Name **G3** Default Grade 3 Name **G4** Default Grade 4 Name	**Save**
	PLS.PRE **SET.TYP**=ACTIVE OR CHECK **LOGIC**=PULSE OR REPEAT	**DELAY.1 to DELAY.4** **Delay Before ON**	**0.00** Enter with numeric keypad.	**Save**
	PLS.ON **SET.TYP**=ACTIVE OR CHECK **LOGIC**=PULSE OR REPEAT	**ON.TIM.1 to ON.TIM.4** **Pulse ON Time**	**0.00** Enter from numeric keypad.	**Save**
	PLS.PST **SET.TYP**=ACTIVE OR CHECK **LOGIC**=PULSE OR REPEAT	**OFF.TM.1 to OFF.TM4** **Pulse OFF Time**	**0.00** Enter from numeric keypad.	**Save**

		END.CH1 **First End Character**	Default: **3** (End of Text (ETX)). Can be set to any valid ASCII character. If set to Null (0), no character will be sent in this position.	**Save**
		END.CH2 **Second End Character**	Default: **0** (No character sent). Can be set to any valid ASCII character. If set to Null (0), no character will be sent in this position.	**Save**
	PRN.OPT **Port 1 Type**=ON.LO or ON.HI **Port 2 Type**=ON **Format**=PRINT.A to C or CUSTOM	**MODE** **Printing Mode**	**MANUAL**: Manual printing using the **<PRINT>** key. **AUTO**: Automatic printing with every new stable (motionless) reading.	**Save**
		HEADER **Print Ticket Header Text**	**Prompts first column character (ie. 001.)** **<SEL>** changes column number. **<EDT>** or alphanumeric keypad used to enter character.	**Save**
		FOOTER **Print Ticket Footer Text**	**Prompts first column character (ie. 001.)** **<SEL>** changes column number. **<EDT>** or alphanumeric keypad used to enter character.	**Save**
		NEW.PAG **New Page String**	**Prompts first column character (ie. 001.)** **<SEL>** changes column number. **<EDT>** or alphanumeric keypad used to enter character.	**Save**
		SPACE **Margin Space** **Columns.Rows (CC.R1)**	Default: **00.00** (zero columns and zero rows) **00** to **09**: Forces blank columns and rows **10**: Forces a printer form feed	**Save**

GRP ZERO	ITM TARE	SEL GROSS/NET	EDT PRINT Underline = Defaults	FRONT OK
SER.P1 and SER.P2 ctd.		**PAGE.H Page Height**	**0** (0 Disables page tracking features)	**Save**
		PAGE.W Page Width	**40** (0 Disables line tracking features.)	**Save**
	CUSTOM **Port 1 Type**=ON.LO or ON.HI **Port 2 Type**=ON **Format**=CUSTOM	**EACH.P1 and EACH.P2** **EACH PRODUCT STRING** Sent **n** times where **n** is the number of products defined.	**Prompts first column character (ie. 001.)** **<SEL>** changes column number. **<EDT>** or alphanumeric keypad used to enter character.	**Save**
		Custom Events: **EV.PRD.T** (Product Total Event) **EV.SES.T** (Session Total Event) **EV.GR.T** (Grand Total Event) **EV.ADD** (Add Event) **EV.CHCK** (Check Event) **EV.HOLD** (Hold Event) **EV.STAB** (Stable Event) **EV.AUTO** (Automatic Transmit Event) **EV.T.NEW** (New Ticket Event) **EV.P.NEW** (New Product Event) **EV.P.END** (New Product Event) **EV.NORM** (New Product Event) **EV.NEW.L** (New Line Event)	**Each Event prompts first Event Token (ie. 001.)** **<SEL>** changes position. **<EDT>** or alphanumeric keypad used to enter character. Refer to Custom Print Format Tokens starting on page 32 for a complete lists of tokens.	**Save**
	USR.NAM **Port 1 Type**=ON.LO or ON.HI **Port 2 Type**=ON **Format**=PRINT.A to C or CUSTOM	**USR.NM1 to USR.NM3** **User String Name**	**S1** Default User String Name 1 **S2** Default User String Name 2 **S3** Default User String Name 3	**Save**
	BAUD	**Serial Baud Rate**	**300, 600, 1200, 2400, 4800, 9600, 19200**	**Save**

	BITS	**Serial Format Options** **<SEL>** changes position Position 1: Parity Position 2: Data Bits Position 3: Stop Bits Position 4: Termination Resistors Position 5: Interface Position 6: DTR Handshake	**N 8 1 - 4 -** (Default Serial Format Options) **<EDT>** changes digit **Parity: N** None, **O** Odd, **E** Even **Data Bits: 7** or **8** data bits **Stop Bits: 1** or **2** stop bits **Termination Resistors: (-)** None or **T** Present (Port 1 only) **Interface:** (**2**) RS-232 or (**4**) RS-485 (Serial 1 only) **DTR Handshake: (-)** Disabled or **D** Enabled (Port 2 only)	**Save**
SET.PTS	**SET.TYP**	**SETP 1, 2, 3, 4** **Setpoint Settings**	**Setpoint Types:** **NONE**: Disables the setpoint **ACTIVE**: Always active **CHECK**: Drives checkweigh bands **ERROR**: Used with errors **MOTION**: Used with motion in weight reading **ZERO**: Used when weight reading within zero band **NET**: Used when in NET mode **HOLD**: Used when reading is held **Setpoint Options:** **<OK>** displays setpoint options. Setpoint Type determines which options are available. **<SEL>** changes position. **<EDT>** changes character. Position 1: Source: **G** Gross, **N** Net, **R** Reading Position 2: Direction: **O** Over, **U** Under Position 3: Logic: **H** High, **L** Low, **P** Pulse, **R** Repeat Position 4: Alarm: (**-**) None, **S** Single Beeps, **D** Double Beeps, **C** Continuous Beeps, **F** Flash Display	**Save**